The EPSRC OxyCAP Project

John Oakey
(h.g.darabkhani@cranfield.ac.uk)

School of Applied Sciences,

Cranfield University

Coal Research Forum 2014

8th APRIL 2014
UNIVERSITY OF WARWICK

Summary

- The Oxy-CAP UK Consortium
- Gaps in the Knowledge of Oxy-fuel Technology
- Project Objectives
- Project Activities - Examples
- Conclusions and What Next?

The OxyCap Consortium

Oxyfuel Combustion - Academic Programme for the UK

(£1,789,493 from EPSRC-EON) 01/11/2009

- **Project Partner:**

UNIVERSITY OF LEEDS

e·on UK

UNIVERSITY OF CAMBRIDGE

Cranfield UNIVERSITY

Imperial College London

University of Kent

The University of Nottingham

ANSYS

DOOSAN Doosan Babcock Energy

THE LINDE GROUP

EPSRC
Engineering and Physical Sciences Research Council

Some Knowledge Gaps in Oxycoal PF Combustion - 2009

- **Combustion behaviour**; impact of different coals on ignition behaviour, impact of varying recycle, modelling, monitoring, etc.
- **Optimum recycled flue gas (RFG) ratio**; to achieve similar combustion and heat transfer characteristics to an air fired operation.
- **Carbon burnout**; this data are only limited to a certain range of coal in the pilot scale studies.
- **Ash formation, slagging and fouling**; the effect of CO_2-rich atmosphere on ash formation
- **Materials**; the impact of varying boiler and recycle environments on materials – water wall/superheater corrosion, acid dew-point corrosion
- **Fine particulates, SO_3, NO_x, trace metal emissions**; differences in conversion of fuel-S to SO_2, SO_3 etc. and sulphur remaining in ash, levels of unburned carbon, condensates in recycle, etc.
- **Radiative Heat Flux measurements**; changes in heat flux with operating conditions
- **Etc.**

Oxy-Cap Research Themes

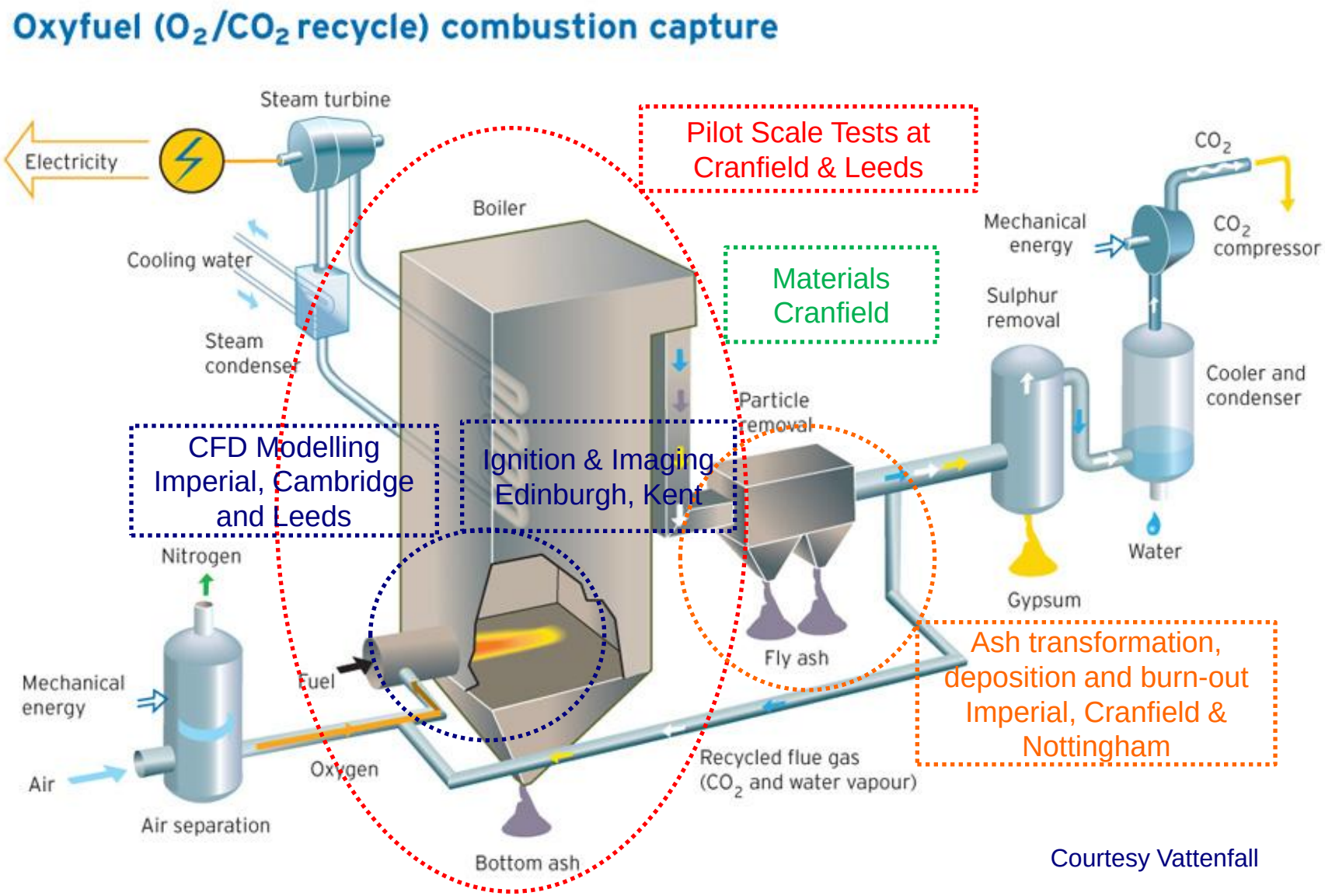

Courtesy Vattenfall

OxyCap Objectives

- Develop a new generation of large-eddy simulation (LES) based, CFD models for coal combustion
- Develop a validation and verification environment that integrates experimental results
- Develop computational sub-models for key areas e.g. radiation, particle ignition, particle
- Measure the effect of the partial pressures of O2 and CO2 on oxy-coal combustion phenomena and establish novel experimental techniques for testing new coals and further sets of combustion conditions
- Analyse the interaction of oxy-combustion products with boiler materials, based on realistic flue gas environments and ash slagging behaviour under oxyfuel combustion conditions
- Increase UK advanced scientific capacity in this area

Oxy-CAP UK Tasks Distribution

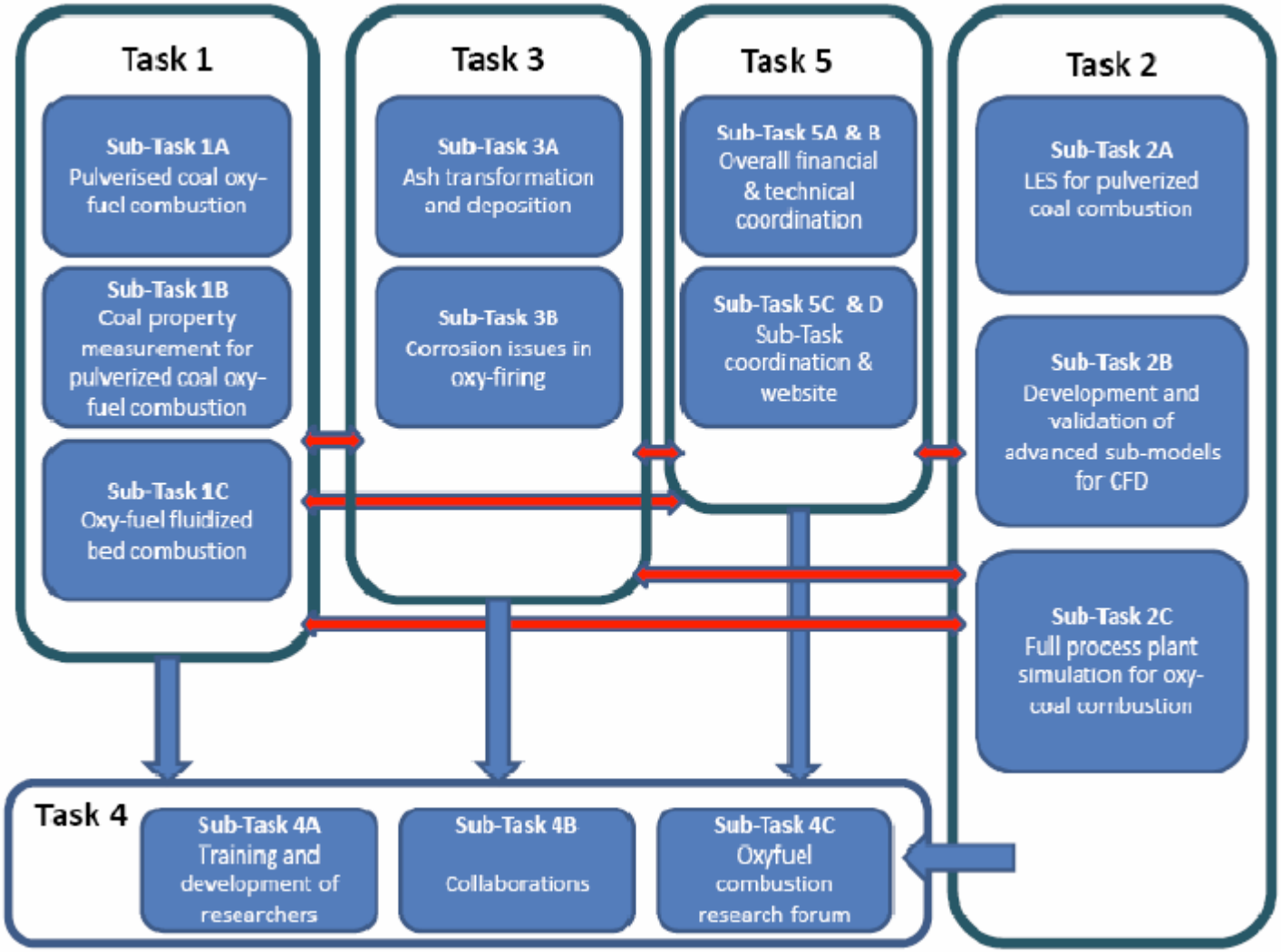

University of Edinburgh

Coal/biomass dust ignition tests in oxyfuel atmospheres carried out at the University of Edinburgh.

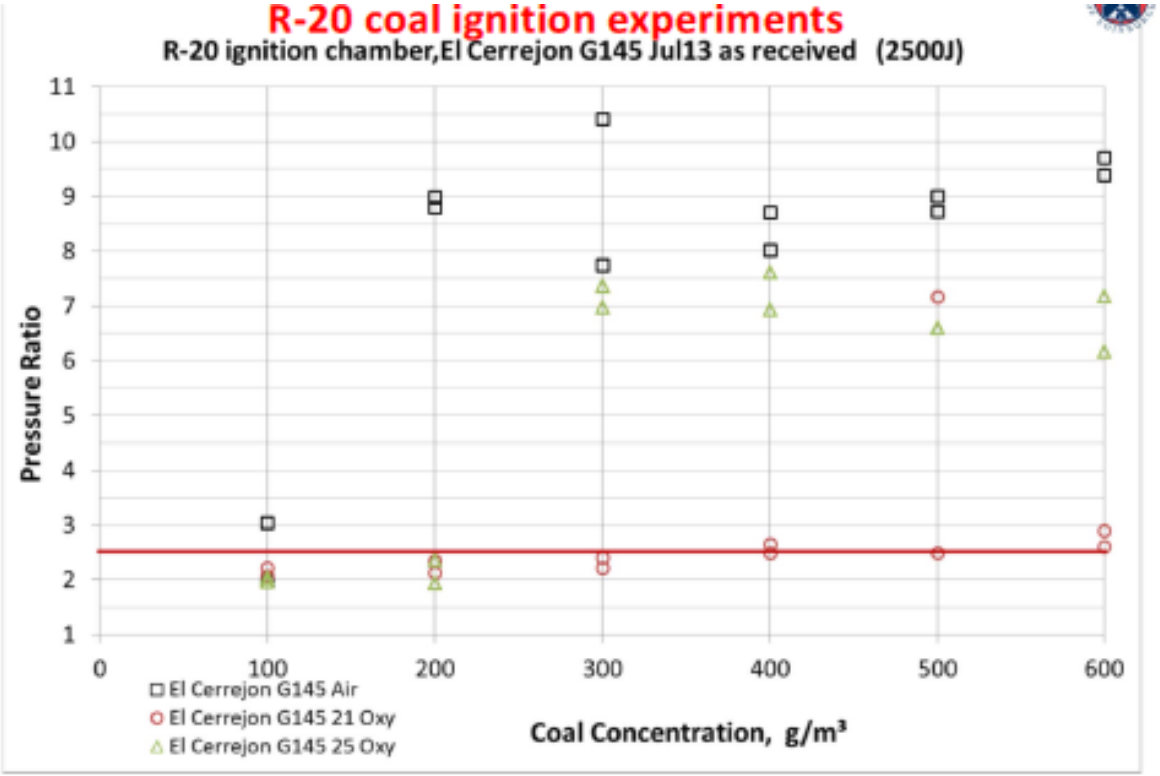

Ignition negative for all concentrations at 21 Oxy. Negatives for 25 Oxy 100-200 g/m³

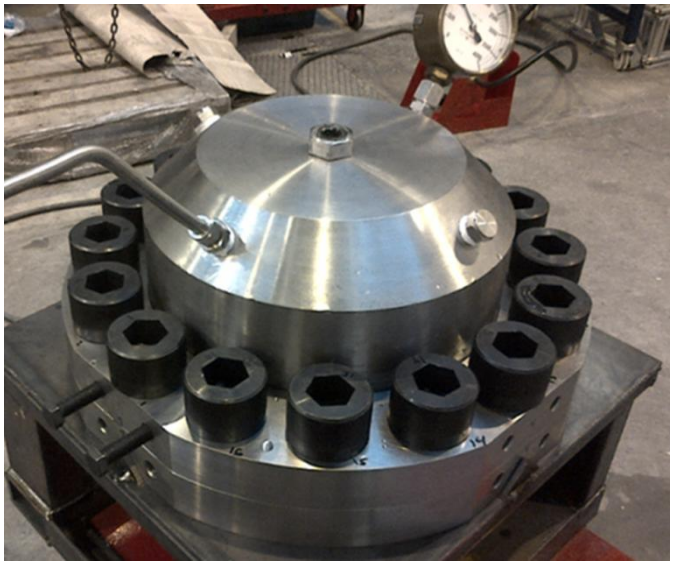

Ignition Test Chamber

University of Nottingham

- The impact of CO_2 and steam on devolatilisation and char burn-out in relation to normal air firing is being assessed by a comprehensive drop tube furnace (DTF) programme at the University of Nottingham.
- The DTF operates up to 1450°C which is high enough to achieve the maximum volatile matter yields for coals with relatively short residence times.
- The results have indicated the enhanced volatile matter yields and char burn-out rates that can be achieved in CO_2.

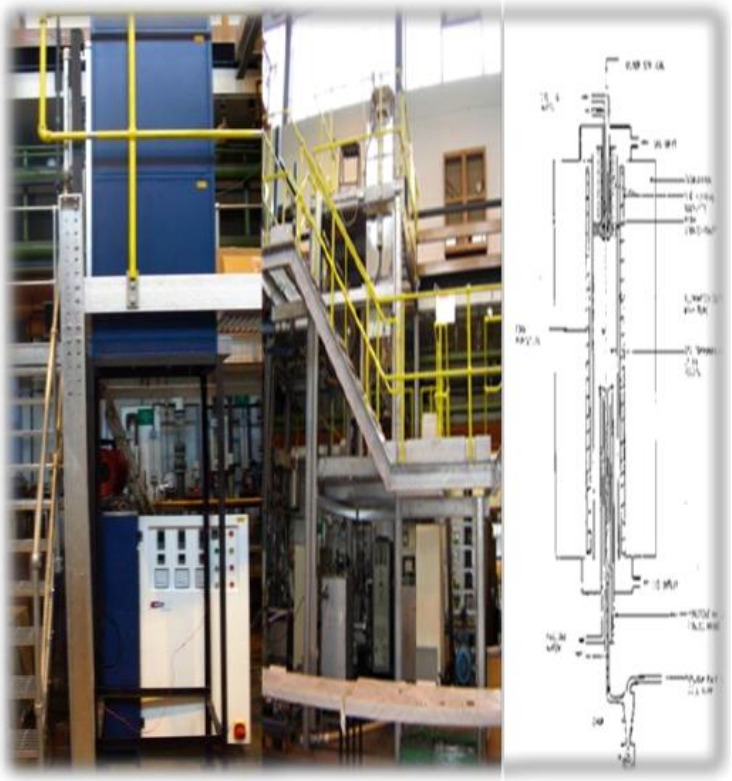

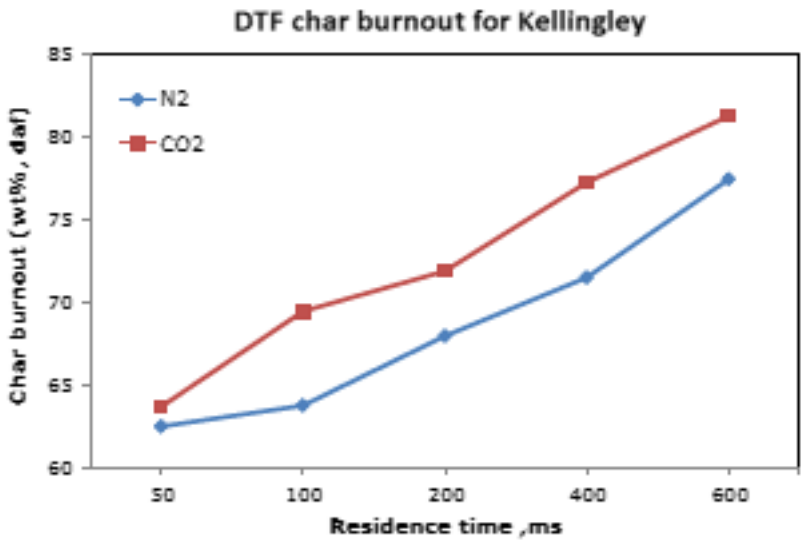

University of Cambridge

UNIVERSITY OF CAMBRIDGE

Oxy-Coal combustion in a $CH_4/O_2/CO_2$ burner
(Experimental work and providing data for LES modelling)

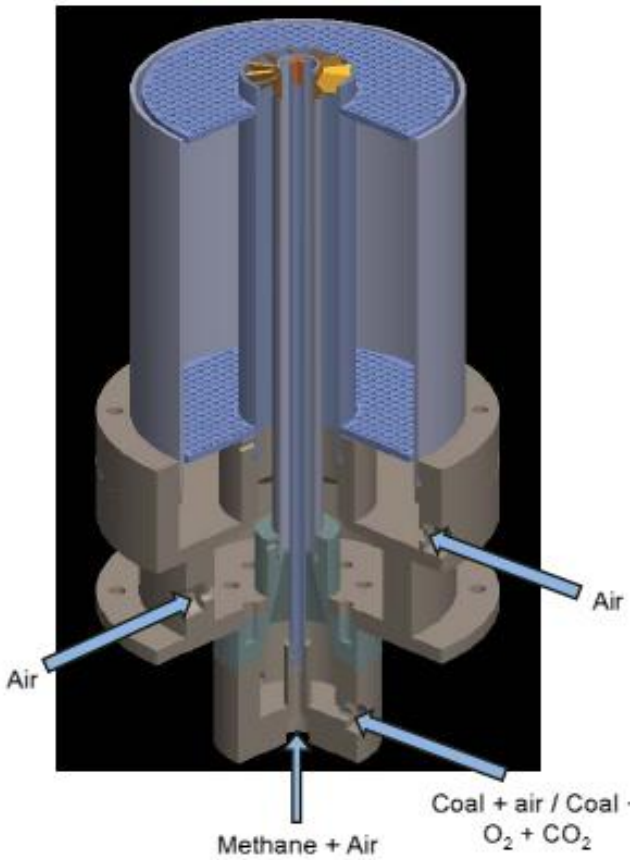

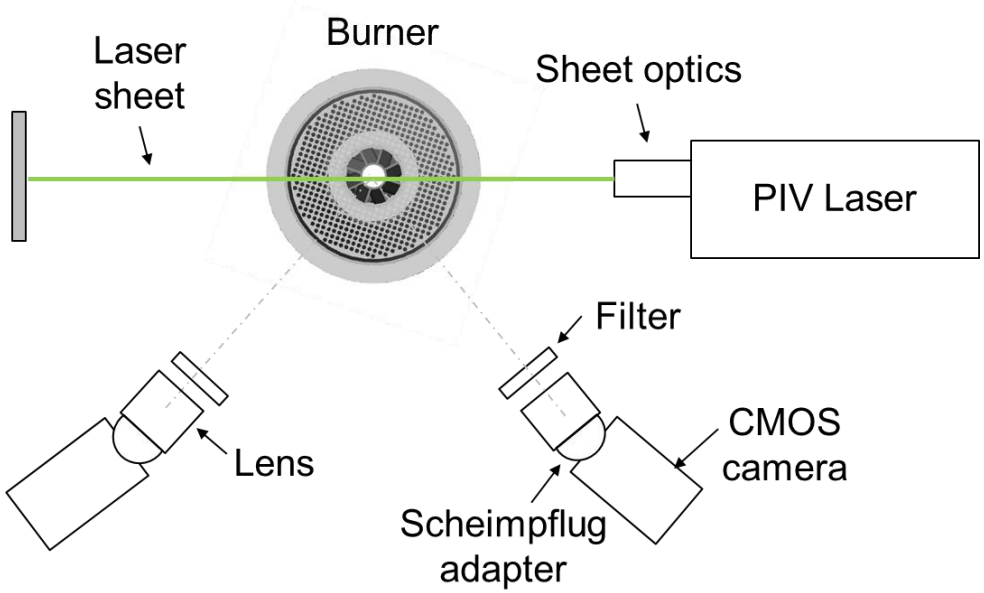

LDV	PIV
System: Dantec Dynamics	System: LaVision
Probe volume: 0.91 X 0.14 X 0.14 mm^3	Imaging area: 60.5 X 52.4 mm^2
Data rate: ~10,000 Hz	Data rate: 3,000 Hz
Samples: 10,000	Samples: 4,096

High-speed stereo particle image velocimetry

Coal Flame and OH*/CH* Images

UNIVERSITY OF CAMBRIDGE

Pilot flame | Plain Air | 21% O_2 79% CO_2 | 25% O_2 75% CO_2 | 30% O_2 70% CO_2 | Plain Air

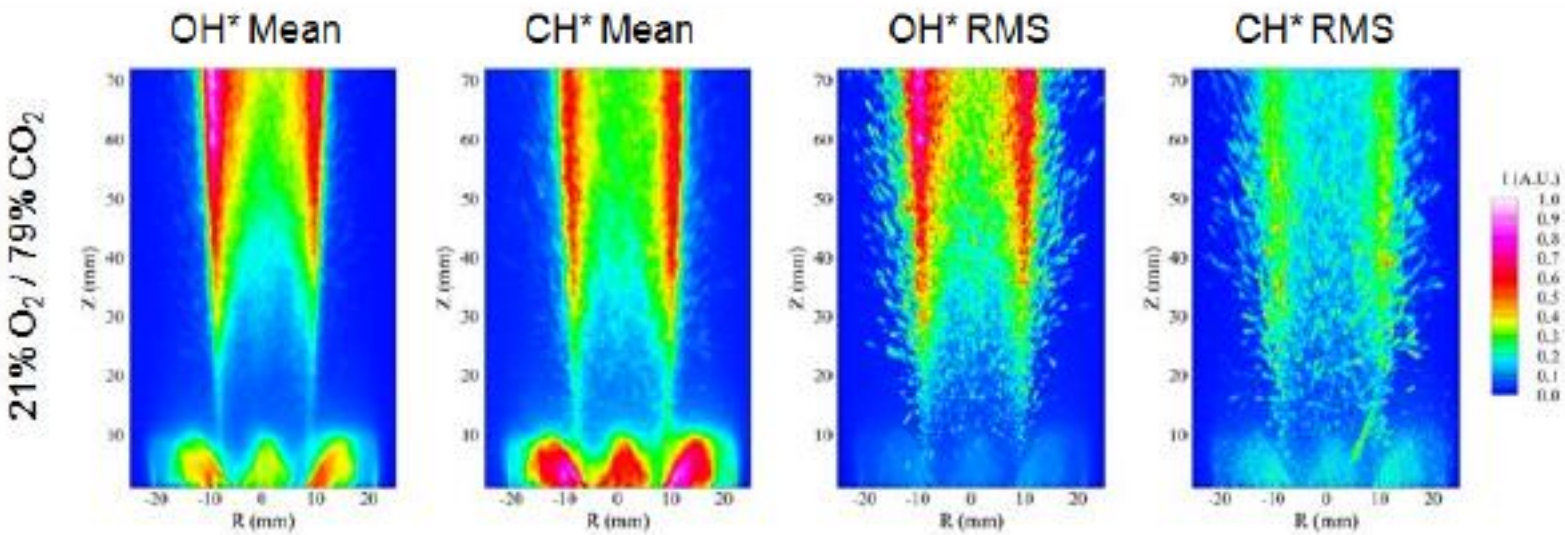

Imperial College London

Imperial College London

- Large Eddy Simulation of the CRIEPI Pulverised Coal Burner
- Ash transformation and deposition in oxyfuel environments

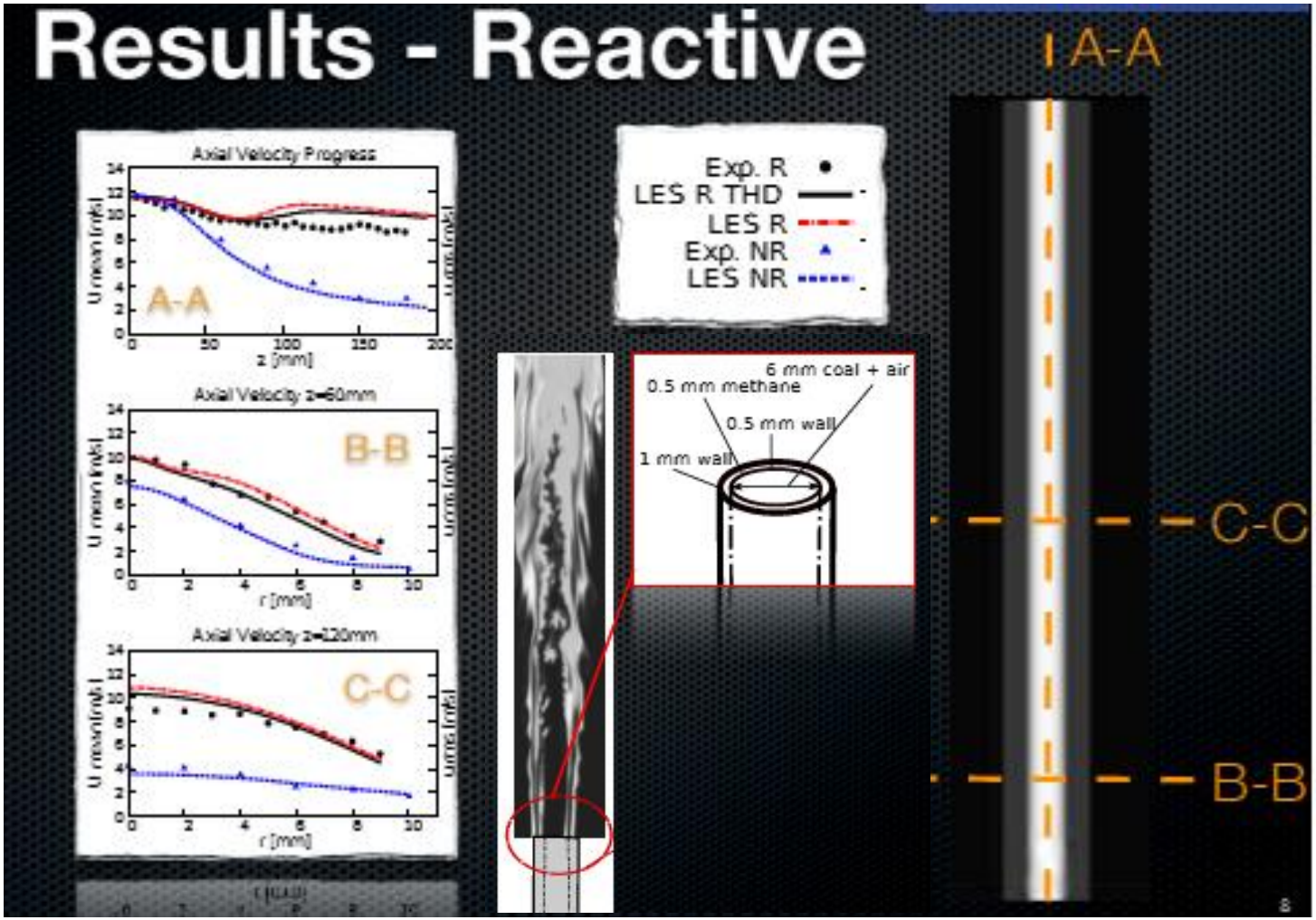

University of Leeds

UNIVERSITY OF LEEDS

- Development of a 250 kW Solid Fuel Combustion Test Facility
- LES CFD modelling of the Oxy-fuel combustion

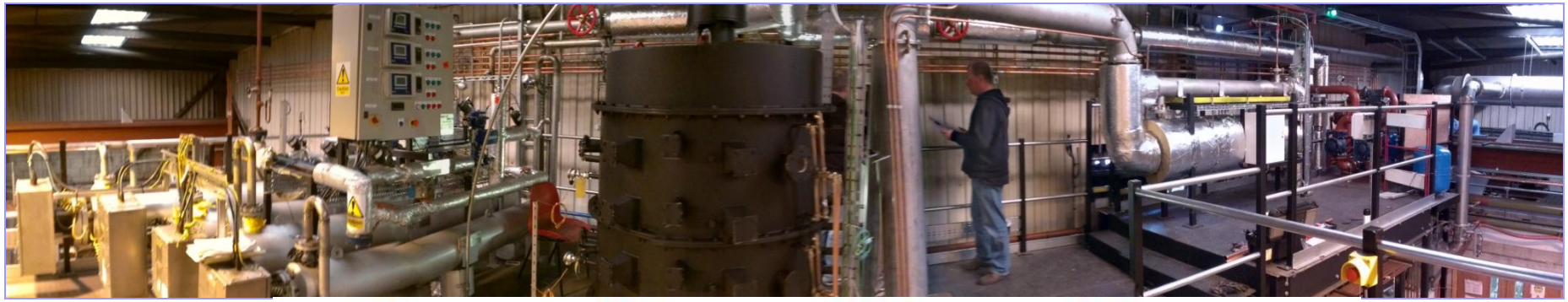

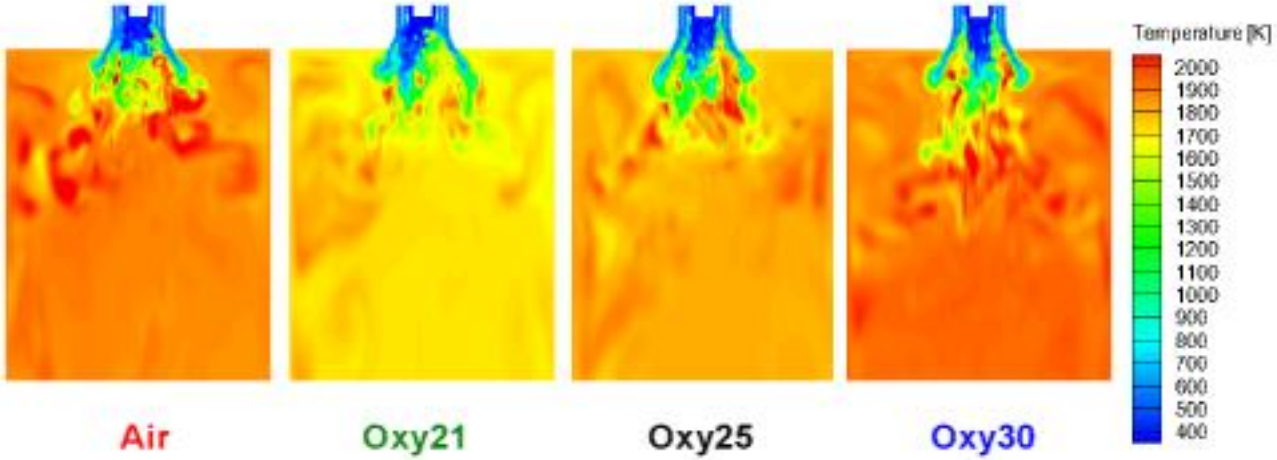

Predicted instantaneous temperature distribution

University of Kent

- 2D and 3-D Flame imaging
- Flow metering and on-line sizing of pulverised coal

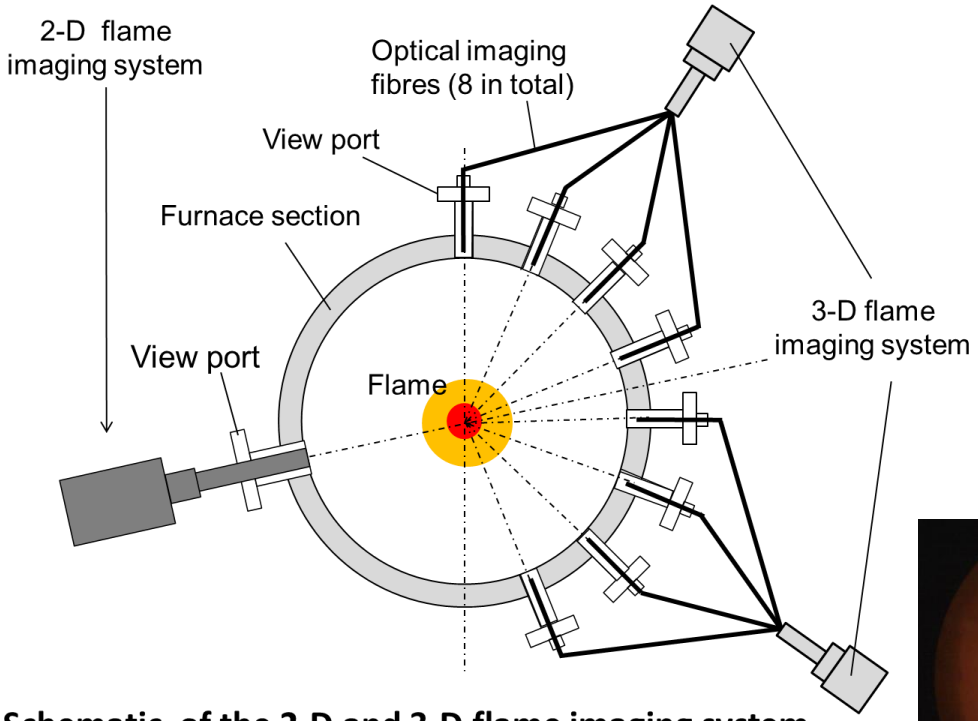

Schematic of the 2-D and 3-D flame imaging system

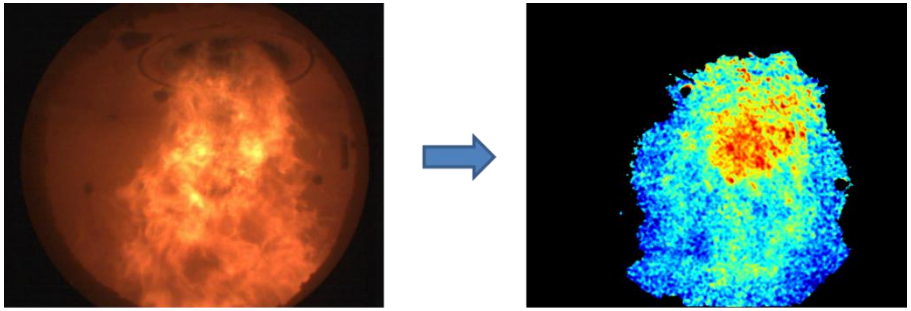

Flame image and temperature distribution

Cranfield University

Two main activities are experimental trials in a 100kW retrofitted oxy-combustor, and the development of a kinetic model using Aspen Plus

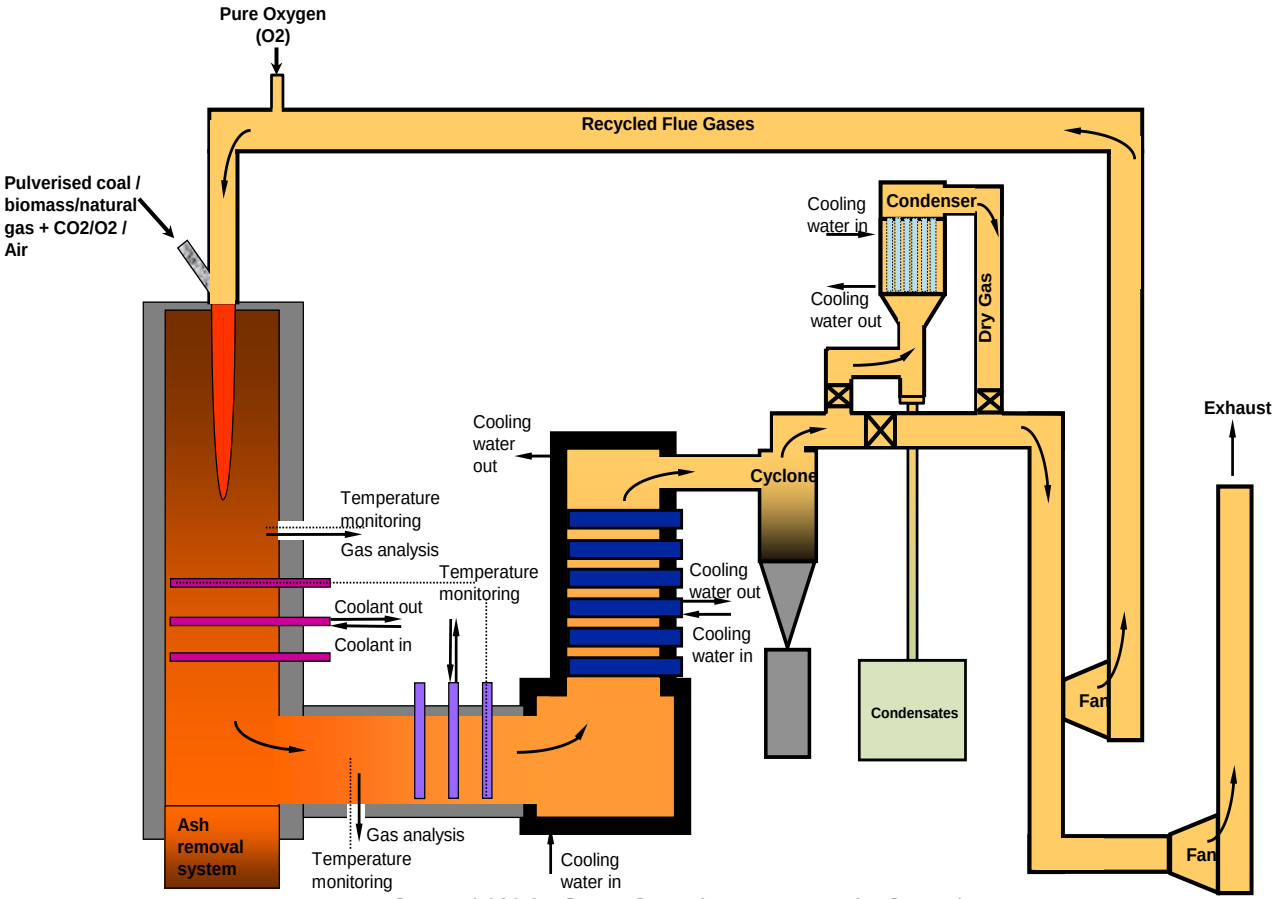

Diagram of 100kWth Oxy-Combustor with Condenser

Experimental and Simulation data

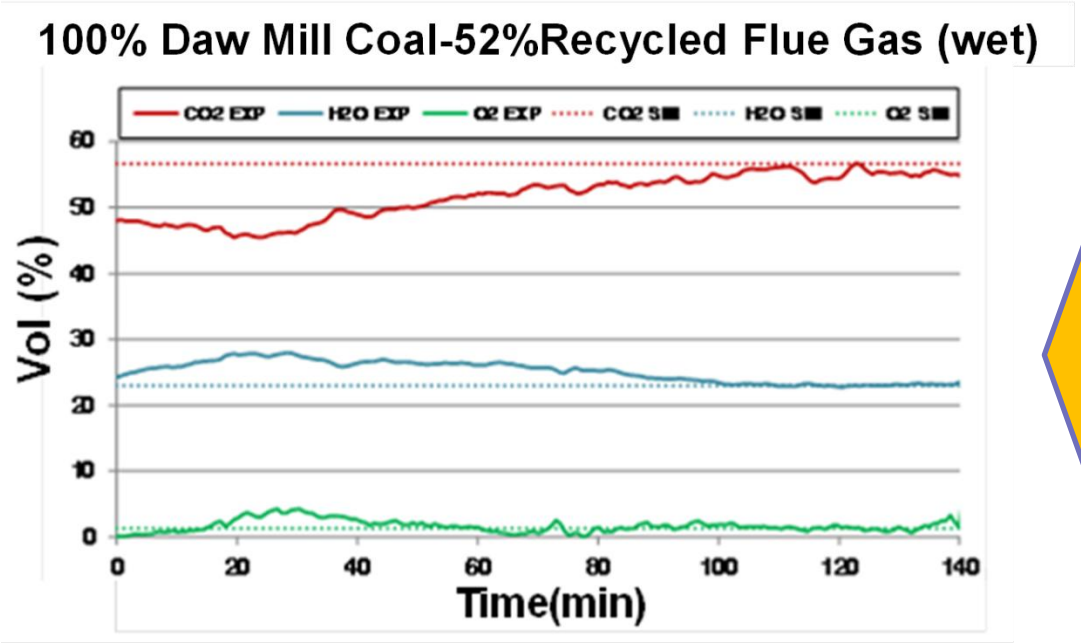

The recirculation flue gas (RFG) rate was set to be of 52% of the total flue gas. The maximum percentage of CO_2 observed was 56.7% wet-based (73.6% in dry-based) when 100% Daw Mill coal was fired.

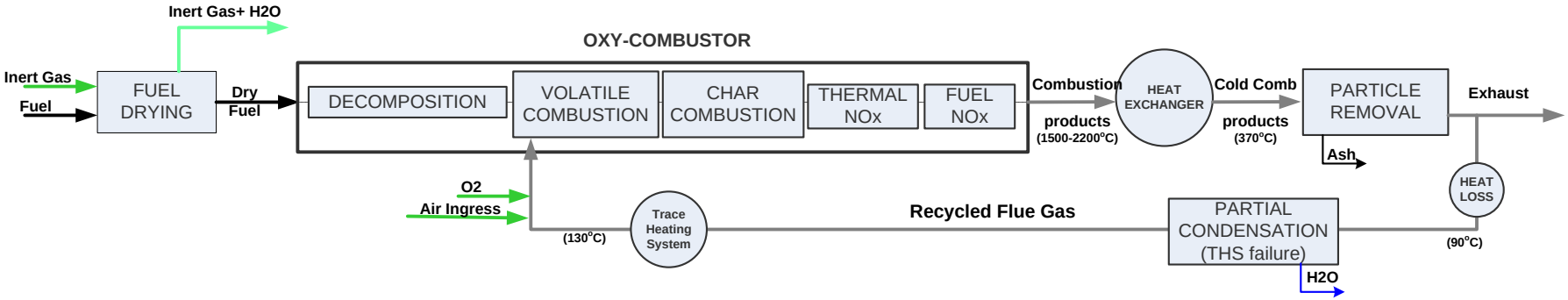

Aspen Plus Box- plot of the Rate-based Model with Partial Condensation in the RFG

Conclusions and What Next?

Oxy-Cap progress

- new data generated on combustion behaviour, new models developed, ignition/burn-out, recycle behaviour, ash behaviour, etc.
- many new skilled researchers trained, and
- increased UK capacity for oxy-combustion research

Oxy-Cap2 – 'To accelerate progress towards achieving Operational Excellence for Flexible, Efficient, Controllable, Safe and Environmentally Sustainable Oxy-fuel fired Power Plants.'

- Oxy-combustion burner design for new and retrofit applications
- Impacts of fuel (coal and biomass) and load changes on boiler/recycle environments and ash behaviour
- Improved understanding of the behaviour of S-, N- and metals including Hg and their impacts on corrosion, gas cleaning requirements and downstream CO_2 separation
- High temperature (fireside) and low temperature (acid dew-point) corrosion, improved materials and component life prediction.
- Development of predictive computational modelling integrated with a dynamic system simulation capability

Thank you for your attention

PACT CO_2 Flow Loop Facility at Cranfield

UKCCSRC PACT FACILITIES

E.ON-EPSRC strategic partnership

- Current configuration - >90 bar, <40 deg

(but capable <700 bar & -50 to 150 deg) in flow mode (fluid flow rates up to 5l/min)

- High pressure observation window-provide detailed information on phase separation, hydrodynamic flows, contamination etc.
- Automated operation
- Continuous monitoring of corrosion by electro chemical noise & Linear polarization resistance
- Measurement and monitoring of physical properties- density, pH, temp, pressure
- Impurities– H_2O, H_2, H_2S, NOx, $SO_2$and O_2 etc..; dedicated MFCs to maintain the proportions

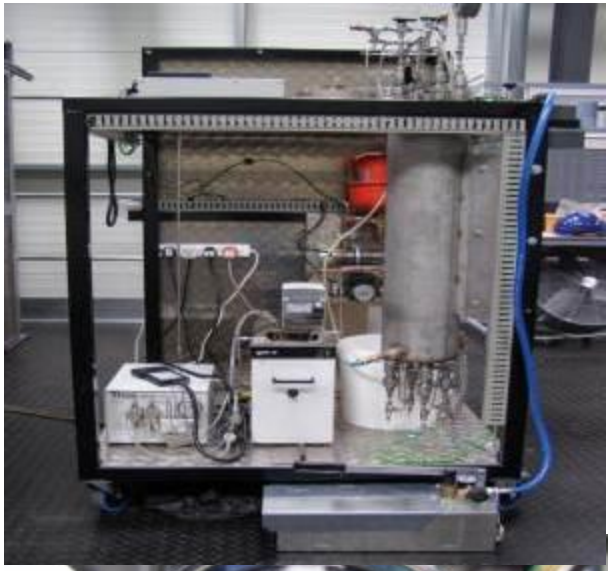

PACT Facilities: Chemical Looping

- **Approx. 50 KW_{th}** pilot scale chemical looping facility-**largest UK facility**
- 100 mm ID riser for chemical (adjustable height to assess the scale up effects ,7.3 m ht) and Ca looping (4.3 m ht)
- Flexible in configuration, either as
  - Twin CFB legs or
  - Single entrained flow riser with bubbling bed (2nd reactor)
- Chemical looping mode-either for **oxy-combustion or for H_2 production**
- Flexible controls to enable a range of operating modes
- Rig supplied with different bulk gas mixtures-- **O_2, CO_2, N_2, H_2 and CO**
- Dedicated **MFCs** for each bulk gas
- Dedicated safety system with controls